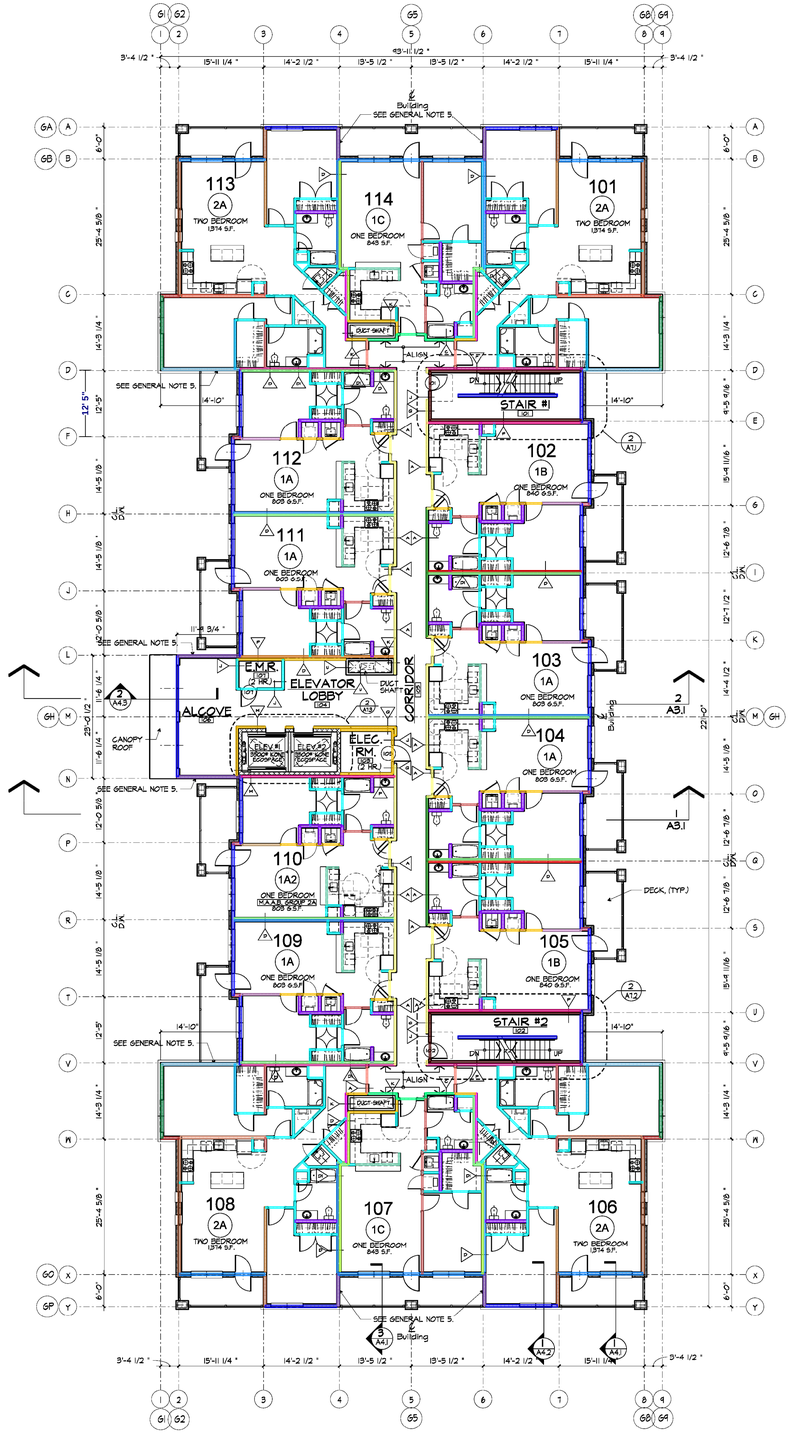

2 FIRST FLOOR PLAN

3/32" = 1'-0"

16,238 GSF

GENERAL NOTES: (FOR FIRST FLOOR)

1. ALL GRID LINES SHOWN ARE FACE OF STUD (F.O.S.) UNLESS NOTED OTHER WISE.
2. ALL DIMENSIONS ARE TO FACE OF STUD UNLESS NOTED OTHERWISE.
   CL = CENTERLINE OF DEMISING WALL
   D/K
3. FOR PARTITION TYPES NOT NOTED REFER TO ENLARGED UNIT PLANS, STAIR & LOBBY PLANS.
4. REFER TO A5 SERIES DRAWINGS FOR ENLARGED UNIT PLANS.
5. ADD 5/8" TYPE X DENS GLASS ON EXTERIOR OF WALL WHEN ADJACENT TO NEIGHBORING DECK, TYP.

UNIT BREAKDOWN:

	GROUP 1A	GROUP 2A
ONE BEDROOM	9	1 (UNIT 110)
ONE BEDROOM + DEN	-	-
TWO BEDROOM	4	-
	13 +	1 = 14 UNITS TOTAL

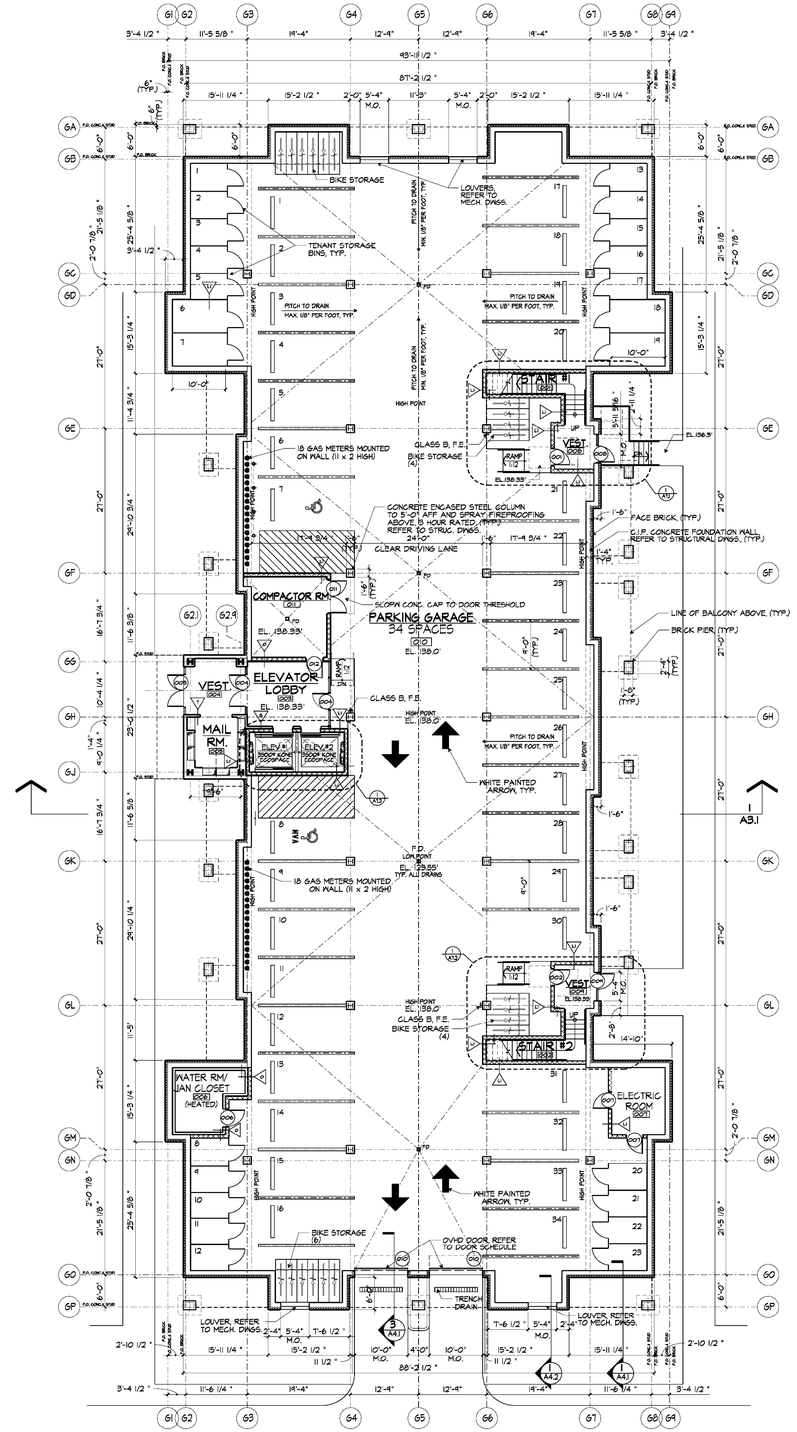

1 GARAGE PLAN

3/32" = 1'-0"

16,591 GSF

600R CROWN COLONY

AN APARTMENT COMMUNITY

Quincy
Massachusetts

sheskeyARCHITECTS

14 Franklin Street Quincy, MA 02169
sheskeyarchitects.com | 617-770-2010

Site Engineers
H. W. MOORE ASSOCIATES
112 Shawmut Avenue
Boston, MA 02118

Landscape Architect
BLAIR HINES DESIGN ASSOCIATES
318 Harvard Street, Suite 25
Brookline, MA 02446

Structural Engineers
VEITAS & VEITAS ENGINEERS
639 Granite Street
Braintree, MA 02184

Mechanical Engineers
SOUTH SHORE CONSTRUCTION CONSULTANTS
34 Quincy avenue
Braintree, MA 02184

Electrical Engineers
VINCENT A. DiIORIO, INC.
89 Access Road, Suite 18
Norwood, MA 02062

PERMIT SET
FEB 29 2016

NOT FOR CONSTRUCTION

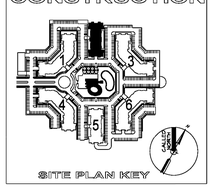

SITE PLAN KEY

date:	revision:
	A1.0

project no: 32129.00 | scale:

BUILDING 2

GARAGE & FIRST FLOOR PLAN

REGISTERED ARCHITECT GARRY W. GARDNER No. 6034 COMMONWEALTH OF MASSACHUSETTS

A1.0

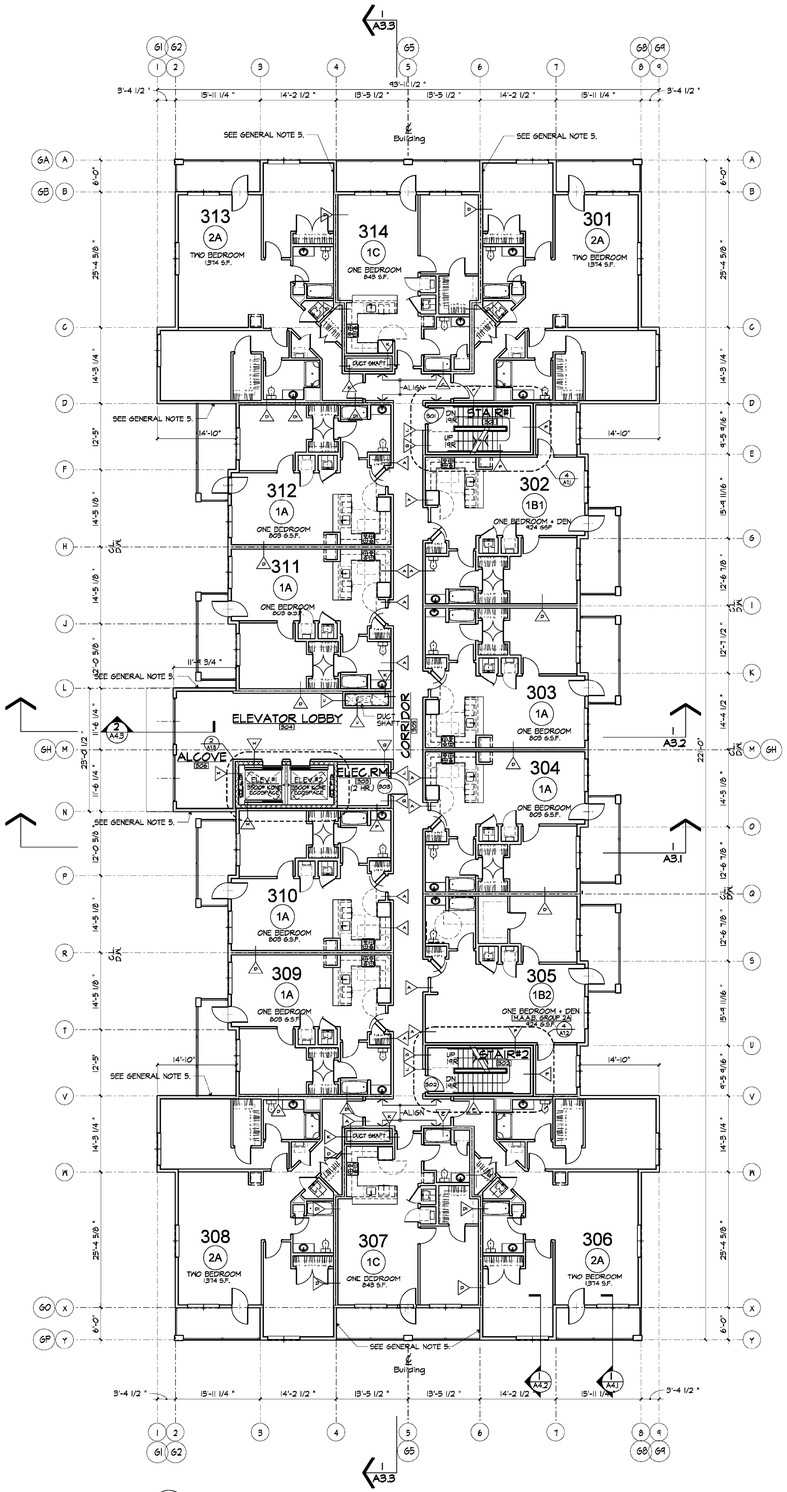

2 THIRD FLOOR PLAN

3/32" = 1'-0"

16,236 GSF

UNIT BREAKDOWN:

	GROUP 1A	GROUP 2A
ONE BEDROOM	8	-
ONE BEDROOM + DEN	1	1 (UNIT 305)
TWO BEDROOM	4	-
	13 +	1 = 14 UNITS TOTAL

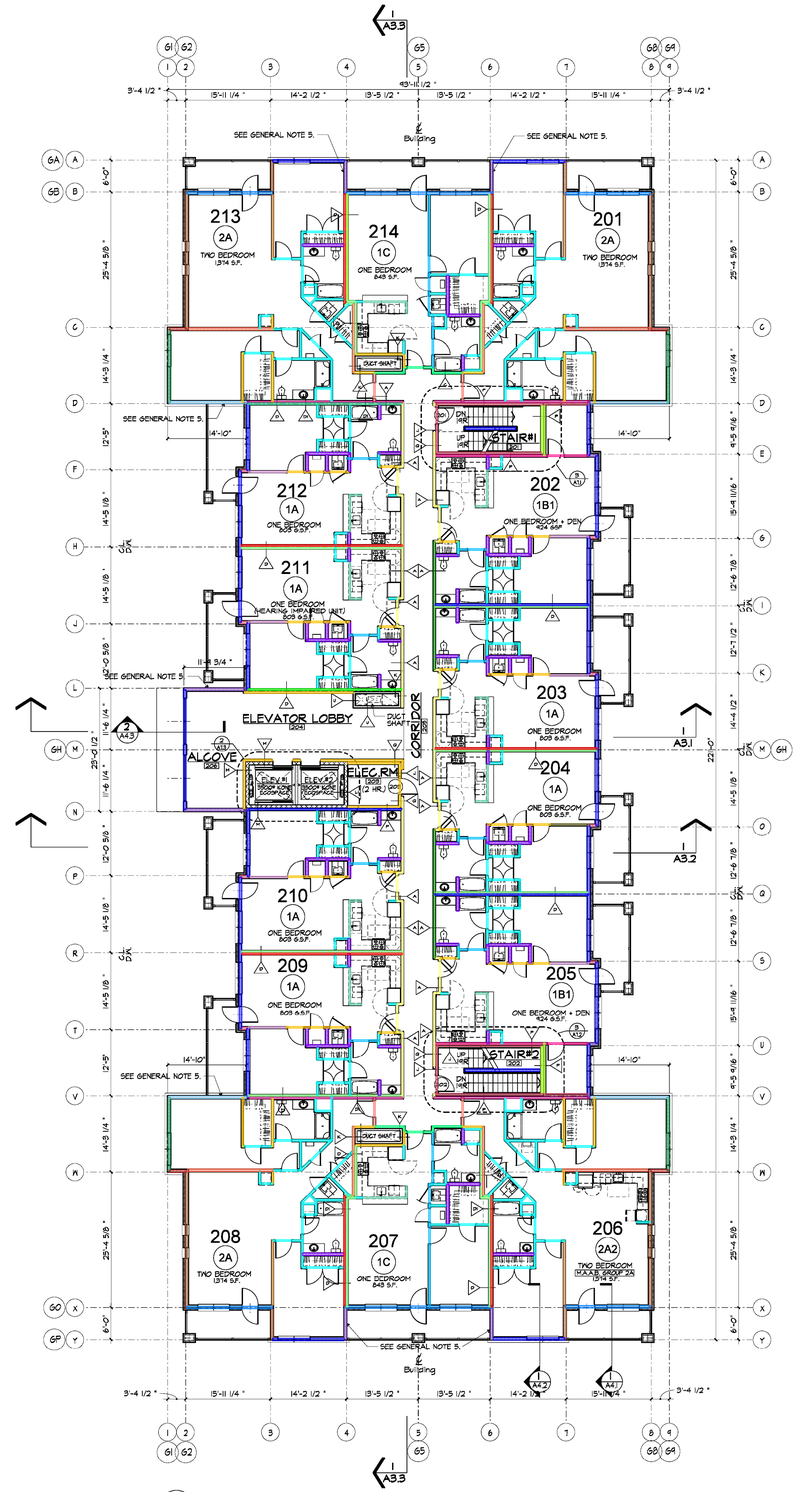

1 SECOND FLOOR PLAN

3/32" = 1'-0"

16,236 GSF

UNIT BREAKDOWN:

	GROUP 1A	GROUP 2A
ONE BEDROOM	8	-
ONE BEDROOM + DEN	2	-
TWO BEDROOM	3	1 (UNIT 206)
	13 +	1 = 14 UNITS TOTAL

HEARING IMPAIRED UNIT = UNIT 211

GENERAL NOTES:

1. ALL GRID LINES SHOWN ARE FACE OF STUD (F.O.S.) UNLESS NOTED OTHER WISE.
2. ALL DIMENSIONS ARE TO FACE OF STUD UNLESS NOTED OTHERWISE.
   ℄ = CENTERLINE OF DEMISING WALL
3. FOR PARTITION TYPES NOT NOTED REFER TO ENLARGED UNIT PLANS, STAIR & LOBBY PLANS.
4. REFER TO A5 SERIES DRAWINGS FOR ENLARGED UNIT PLANS.
5. ADD 5/8" TYPE "X" DENS GLASS ON EXTERIOR OF WALL WHEN ADJACENT TO NEIGHBORING DECK. TYP FOR ALL FLOORS.

600R CROWN COLONY

AN APARTMENT COMMUNITY

Quincy
Massachusetts

sheskeyARCHITECTS

14 Franklin Street Quincy, MA 02169
sheskeyarchitects.com | 617-770-2010

Site Engineers
H. W. MOORE ASSOCIATES
112 Shawmut Avenue
Boston, MA 02118

Landscape Architect
BLAIR HINES DESIGN ASSOCIATES
319 Harvard Street, Suite 25
Brookline, MA 02446

Structural Engineers
VEITAS & VEITAS ENGINEERS
639 Granite Street
Braintree, MA 02184

Mechanical Engineers
SOUTH SHORE
CONSTRUCTION CONSULTANTS
34 Quincy avenue
Braintree, MA 02184

Electrical Engineers
VINCENT A. DiIORIO, INC.
89 Access Road, Suite 18
Norwood, MA 02062

PERMIT SET
FEB 29 2016

NOT FOR CONSTRUCTION

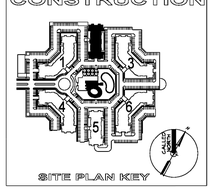

SITE PLAN KEY

date:	revision:
	A1.1
project no: 32129.00	scale:

BUILDING 2

SECOND & THIRD FLOOR PLANS

REGISTERED ARCHITECT
BARRY W. GARDNER
No. 6034
COMMONWEALTH OF MASSACHUSETTS

A1.1

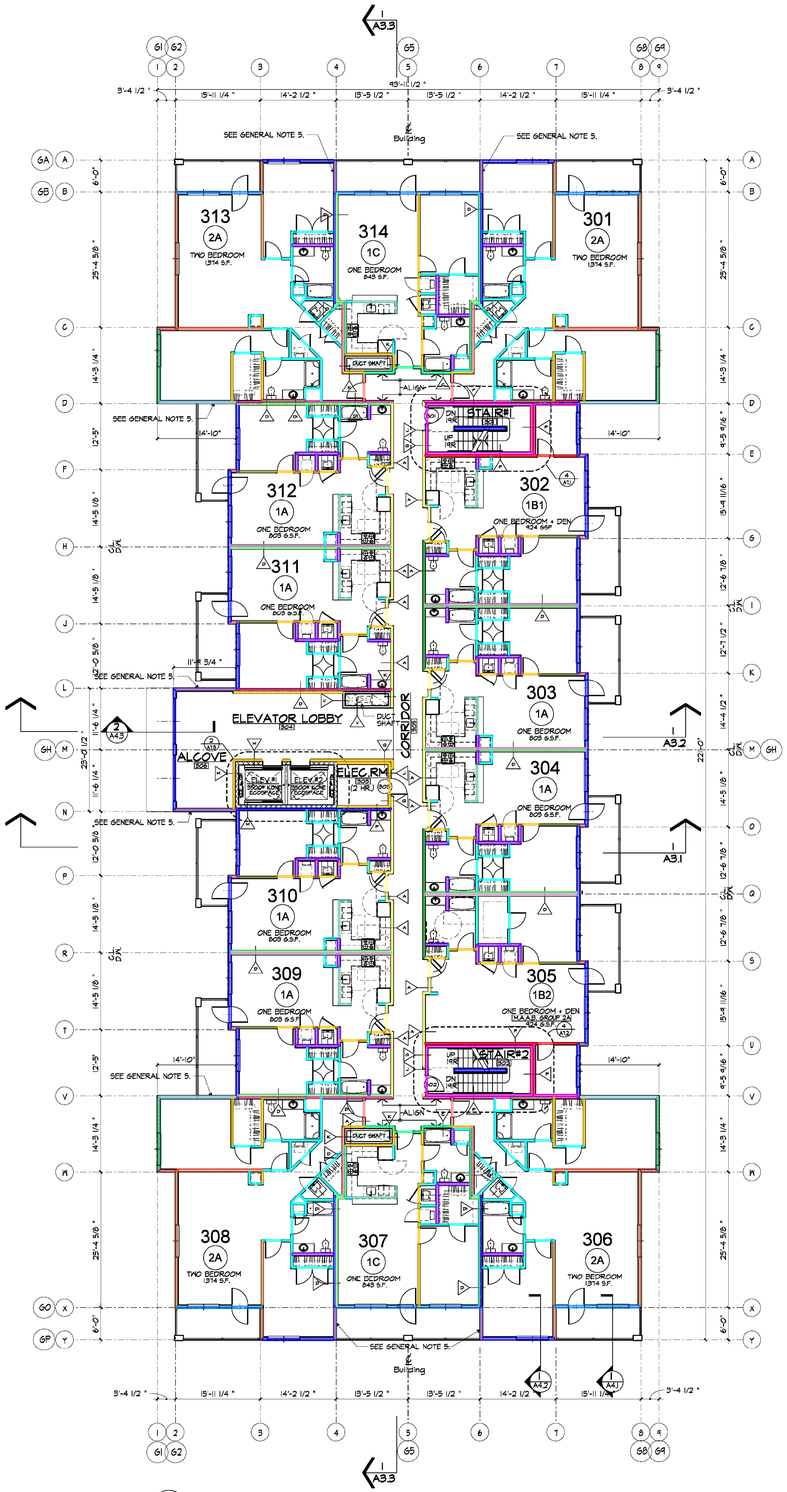

2 THIRD FLOOR PLAN

3/32" = 1'-0"

16,236 GSF

UNIT BREAKDOWN:

	GROUP 1A	GROUP 2A
ONE BEDROOM	8	-
ONE BEDROOM + DEN	1	1 (UNIT 305)
TWO BEDROOM	4	-
	13 +	1 = 14 UNITS TOTAL

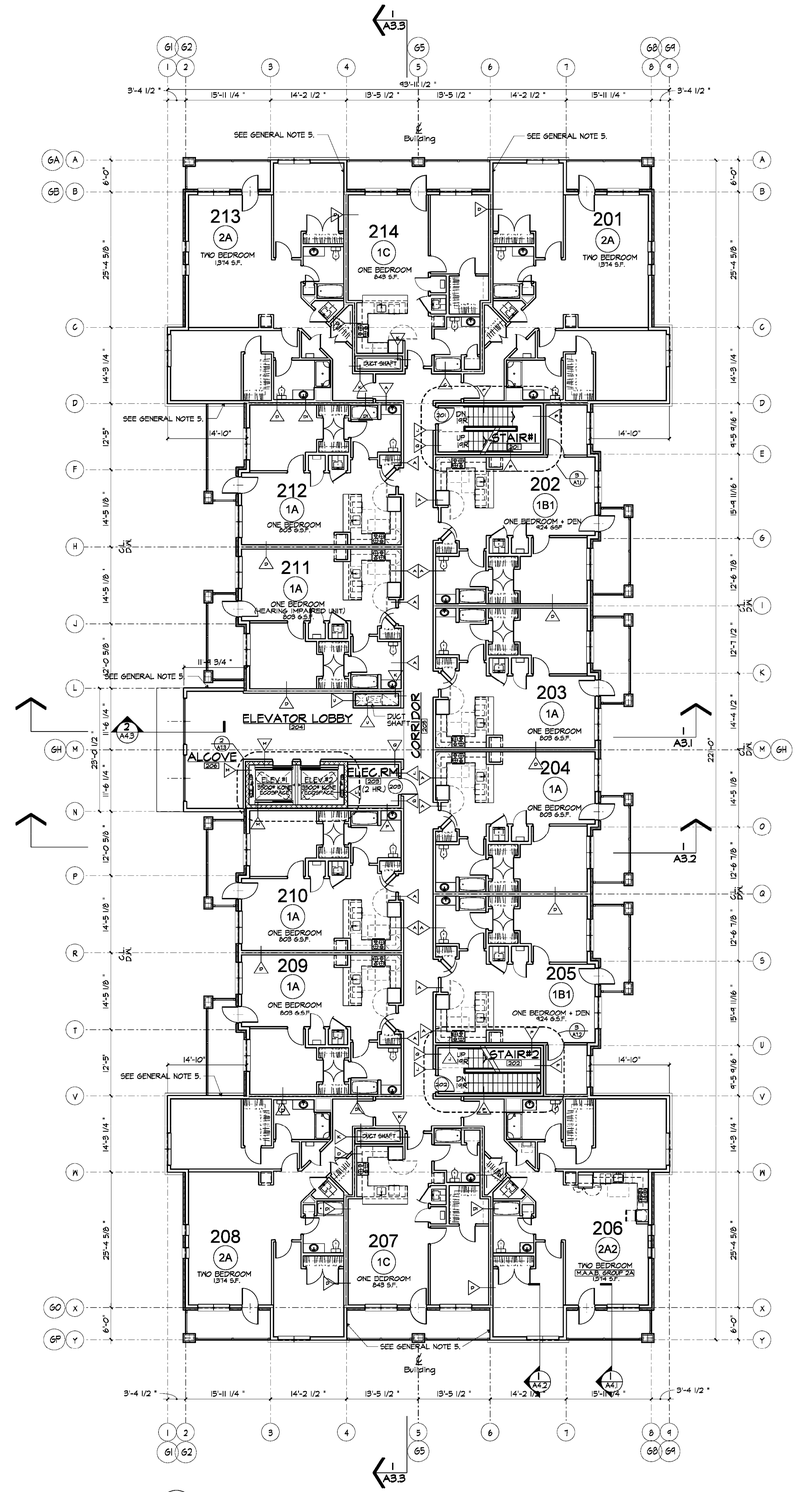

1 SECOND FLOOR PLAN

3/32" = 1'-0"

16,236 GSF

UNIT BREAKDOWN:

	GROUP 1A	GROUP 2A
ONE BEDROOM	8	-
ONE BEDROOM + DEN	2	-
TWO BEDROOM	3	1 (UNIT 206)
	13 +	1 = 14 UNITS TOTAL

HEARING IMPAIRED UNIT = UNIT 211

GENERAL NOTES:

1. ALL GRID LINES SHOWN ARE FACE OF STUD (F.O.S.) UNLESS NOTED OTHER WISE.
2. ALL DIMENSIONS ARE TO FACE OF STUD UNLESS NOTED OTHERWISE.
   ℄ = CENTERLINE OF DEMISING WALL
3. FOR PARTITION TYPES NOT NOTED REFER TO ENLARGED UNIT PLANS, STAIR & LOBBY PLANS.
4. REFER TO A5 SERIES DRAWINGS FOR ENLARGED UNIT PLANS.
5. ADD 5/8" TYPE "X" DENS GLASS ON EXTERIOR OF WALL WHEN ADJACENT TO NEIGHBORING DECK. TYP FOR ALL FLOORS.

600R CROWN COLONY

AN APARTMENT COMMUNITY

Quincy
Massachusetts

sheskeyARCHITECTS

14 Franklin Street Quincy, MA 02169
sheskeyarchitects.com | 617-770-2010

Site Engineers
H. W. MOORE ASSOCIATES
112 Shawmut Avenue
Boston, MA 02118

Landscape Architect
BLAIR HINES DESIGN ASSOCIATES
319 Harvard Street, Suite 25
Brookline, MA 02446

Structural Engineers
VEITAS & VEITAS ENGINEERS
639 Granite Street
Braintree, MA 02184

Mechanical Engineers
SOUTH SHORE
CONSTRUCTION CONSULTANTS
34 Quincy avenue
Braintree, MA 02184

Electrical Engineers
VINCENT A. DiIORIO, INC.
89 Access Road, Suite 18
Norwood, MA 02062

PERMIT SET
FEB 29 2016

NOT FOR CONSTRUCTION

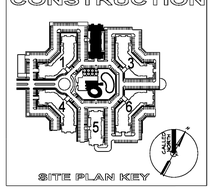

SITE PLAN KEY

date:	revision:
	A1.1
project no: 32129.00	scale:

BUILDING 2

SECOND & THIRD FLOOR PLANS

REGISTERED ARCHITECT
BARRY W. GARDNER
No. 6034
COMMONWEALTH OF MASSACHUSETTS

A1.1

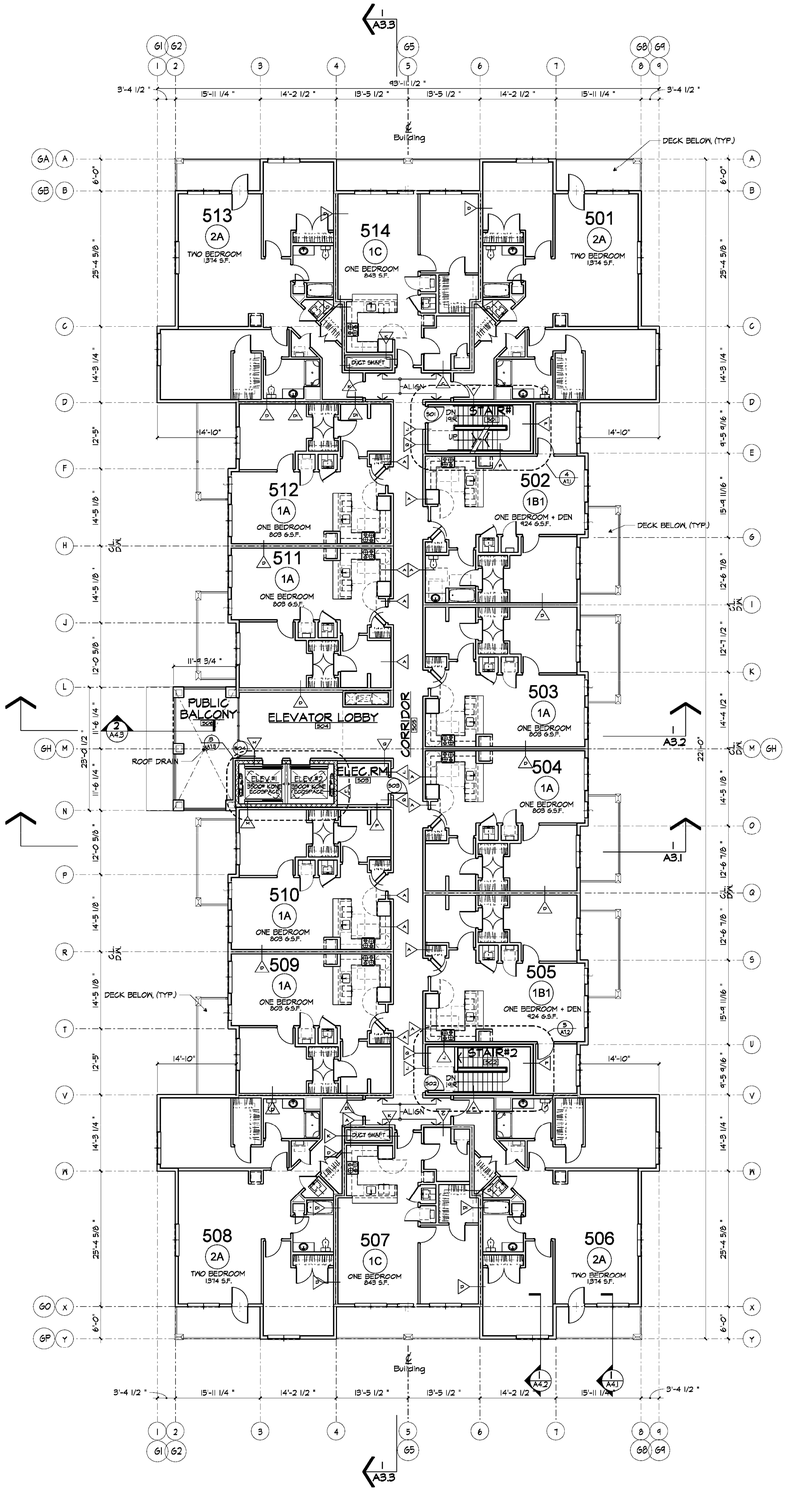

2 FIFTH FLOOR PLAN

3/32" = 1'-0"

16,238 GSF

UNIT BREAKDOWN:

	GROUP 1A	GROUP 2A
ONE BEDROOM	8	-
ONE BEDROOM + DEN	2	-
TWO BEDROOM	4	-

14 UNITS TOTAL

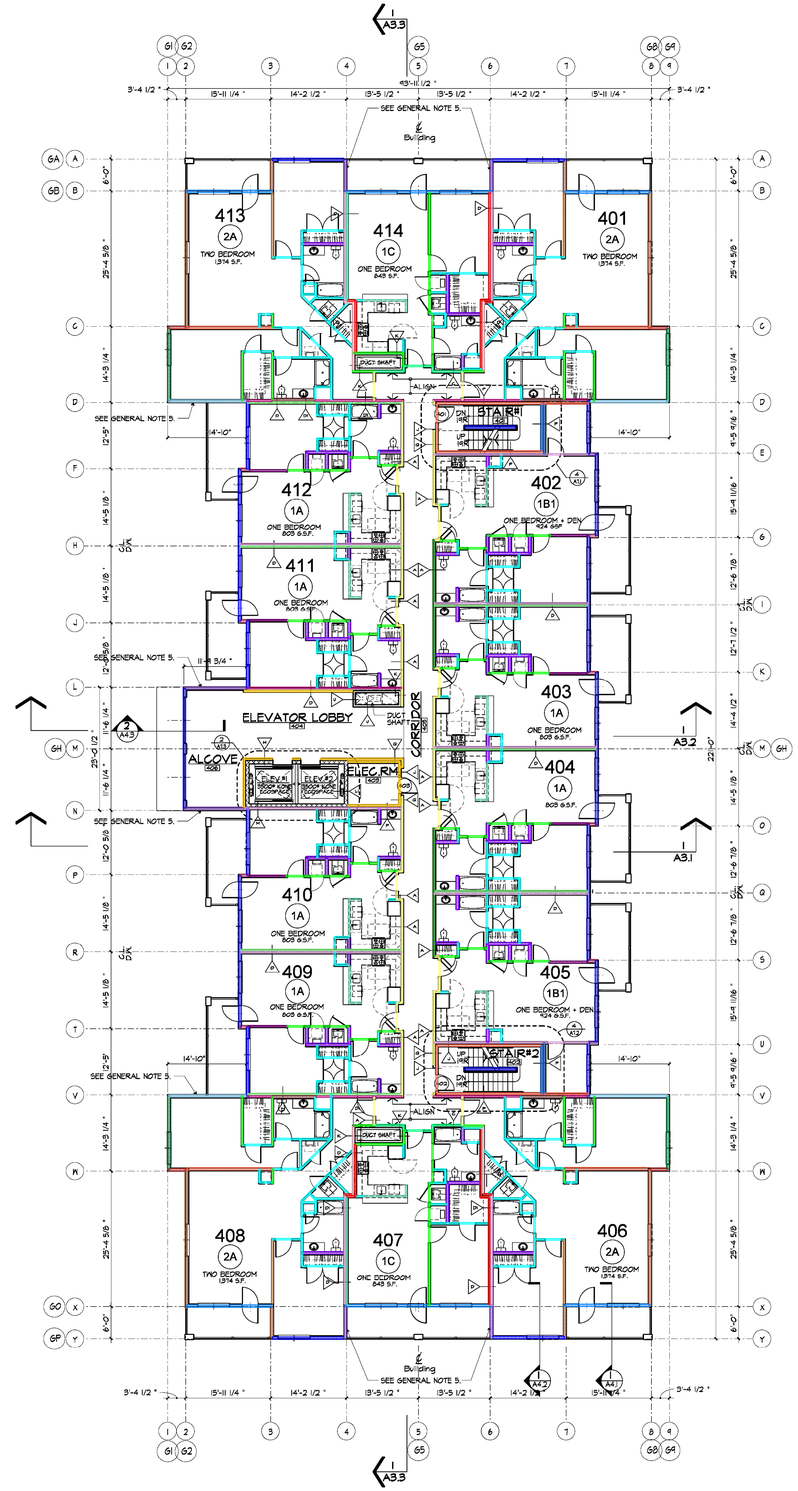

1 FOURTH FLOOR PLAN

3/32" = 1'-0"

16,238 GSF

UNIT BREAKDOWN:

	GROUP 1A	GROUP 2A
ONE BEDROOM	8	-
ONE BEDROOM + DEN	2	-
TWO BEDROOM	4	-

14 UNITS TOTAL

GENERAL NOTES:

1. ALL GRID LINES SHOWN ARE FACE OF STUD (F.O.S.) UNLESS NOTED OTHERWISE.
2. ALL DIMENSIONS ARE TO FACE OF STUD UNLESS NOTED OTHERWISE.
   ℄ = CENTERLINE OF DEMISING WALL
3. FOR PARTITION TYPES NOT NOTED REFER TO ENLARGED UNIT PLANS, STAIR & LOBBY PLANS.
4. REFER TO A5 SERIES DRAWINGS FOR ENLARGED UNIT PLANS.
5. ADD 5/8" TYPE "X" DENS GLASS ON EXTERIOR OF WALL WHEN ADJACENT TO NEIGHBORING DECK, TYP FOR ALL FLOORS.

600R CROWN COLONY

AN APARTMENT COMMUNITY

Quincy
Massachusetts

sheskeyARCHITECTS

14 Franklin Street Quincy, MA 02169
sheskeyarchitects.com | 617-770-2010

Site Engineers
H. W. MOORE ASSOCIATES
112 Shawmut Avenue
Boston, MA 02118

Landscape Architect
BLAIR HINES DESIGN ASSOCIATES
319 Harvard Street, Suite 25
Brookline, MA 02446

Structural Engineers
VEITAS & VEITAS ENGINEERS
639 Granite Street
Braintree, MA 02184

Mechanical Engineers
SOUTH SHORE CONSTRUCTION CONSULTANTS
34 Quincy avenue
Braintree, MA 02184

Electrical Engineers
VINCENT A. DiIORIO, INC.
89 Access Road, Suite 18
Norwood, MA 02062

PERMIT SET
FEB 29 2016

NOT FOR CONSTRUCTION

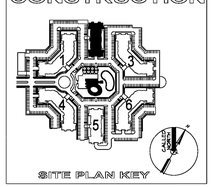

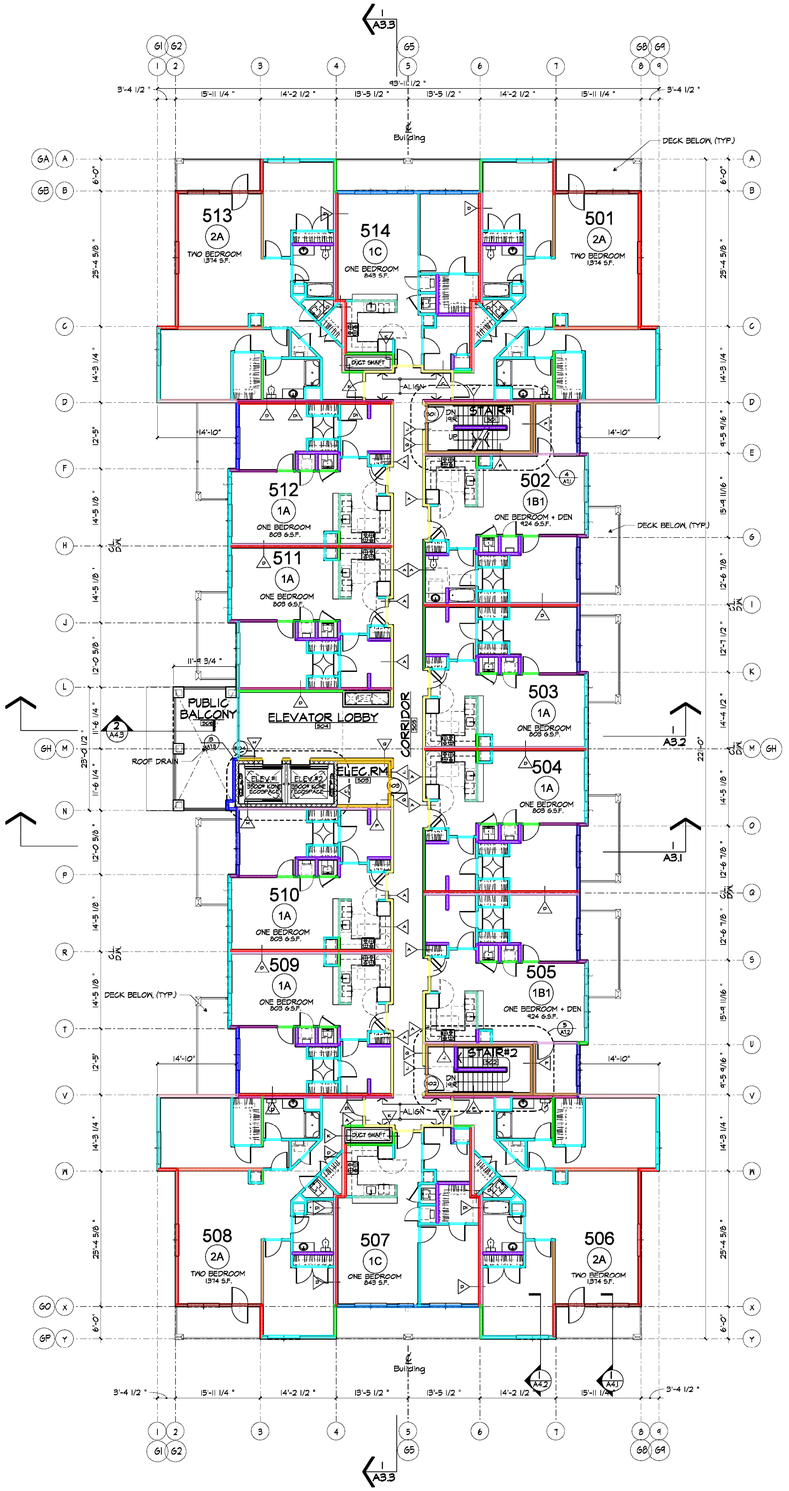

2 FIFTH FLOOR PLAN

3/32" = 1'-0"

16,238 GSF

UNIT BREAKDOWN:

	GROUP 1A	GROUP 2A
ONE BEDROOM	8	-
ONE BEDROOM + DEN	2	-
TWO BEDROOM	4	-

14 UNITS TOTAL

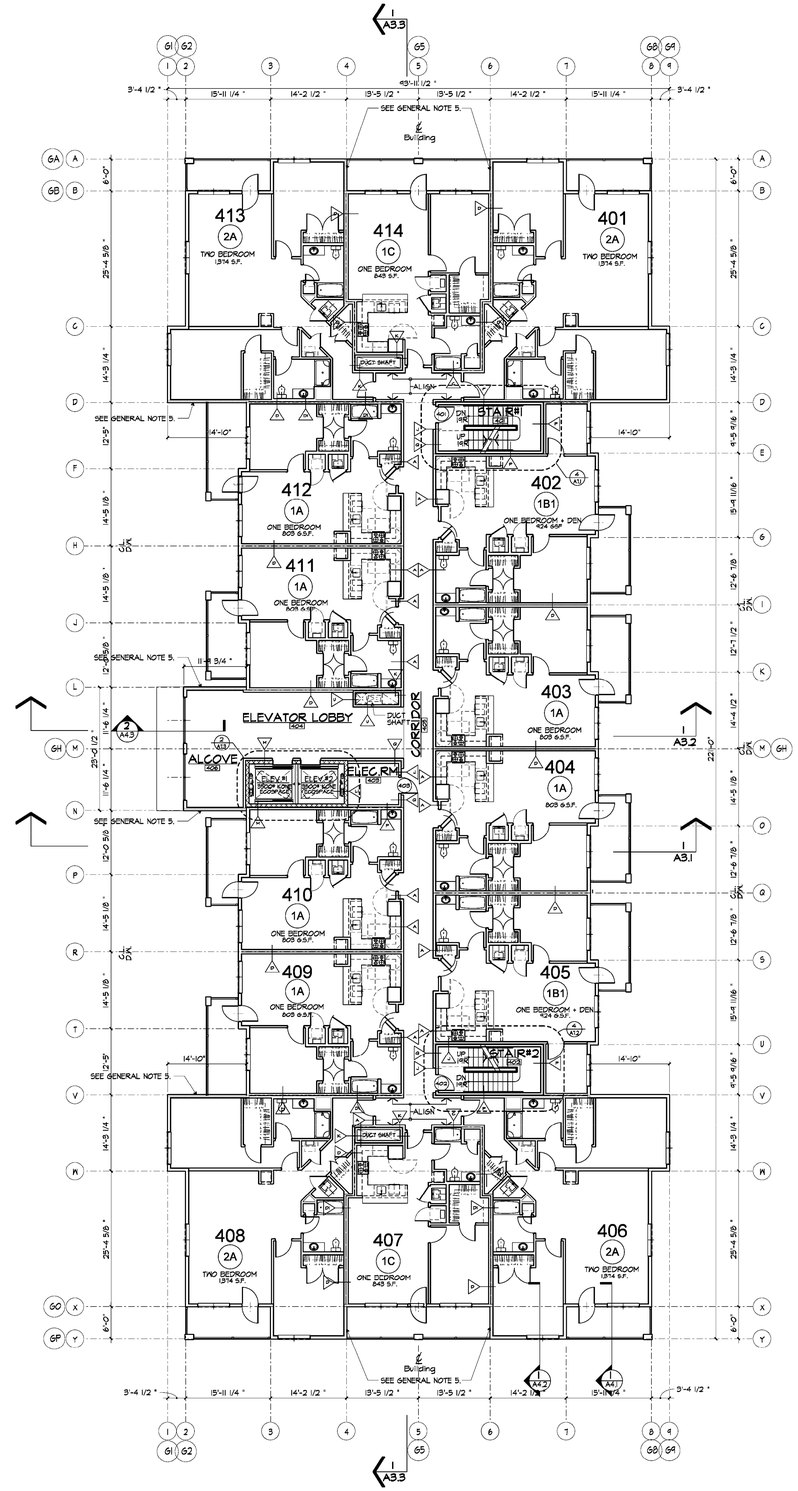

1 FOURTH FLOOR PLAN

3/32" = 1'-0"

16,238 GSF

UNIT BREAKDOWN:

	GROUP 1A	GROUP 2A
ONE BEDROOM	8	-
ONE BEDROOM + DEN	2	-
TWO BEDROOM	4	-

14 UNITS TOTAL

GENERAL NOTES:

1. ALL GRID LINES SHOWN ARE FACE OF STUD (F.O.S.) UNLESS NOTED OTHERWISE.
2. ALL DIMENSIONS ARE TO FACE OF STUD UNLESS NOTED OTHERWISE.
   ℄ = CENTERLINE OF DEMISING WALL
   D/A
3. FOR PARTITION TYPES NOT NOTED REFER TO ENLARGED UNIT PLANS, STAIR & LOBBY PLANS.
4. REFER TO A5 SERIES DRAWINGS FOR ENLARGED UNIT PLANS.
5. ADD 5/8" TYPE "X" DENS GLASS ON EXTERIOR OF WALL WHEN ADJACENT TO NEIGHBORING DECK, TYP FOR ALL FLOORS.

600R CROWN COLONY

AN APARTMENT COMMUNITY

Quincy
Massachusetts

sheskeyARCHITECTS

14 Franklin Street Quincy, MA 02169
sheskeyarchitects.com | 617-770-2010

Site Engineers
H. W. MOORE ASSOCIATES
112 Shawmut Avenue
Boston, MA 02118

Landscape Architect
BLAIR HINES DESIGN ASSOCIATES
319 Harvard Street, Suite 25
Brookline, MA 02446

Structural Engineers
VEITAS & VEITAS ENGINEERS
639 Granite Street
Braintree, MA 02184

Mechanical Engineers
SOUTH SHORE
CONSTRUCTION CONSULTANTS
34 Quincy avenue
Braintree, MA 02184

Electrical Engineers
VINCENT A. DiIORIO, INC.
89 Access Road, Suite 18
Norwood, MA 02062

PERMIT SET
FEB 29 2016

NOT FOR CONSTRUCTION

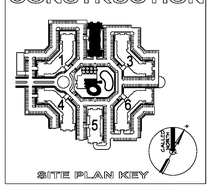

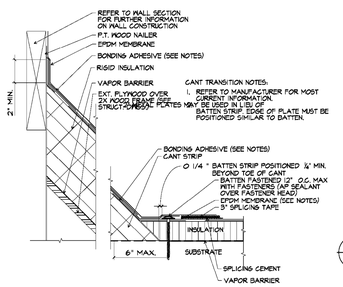

CANT TRANSITION DETAIL
NTS

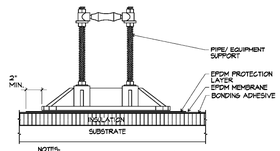

NOTES:
1. PIPE SUPPORT SHOWN IS ONE OF MANY TYPES OFFERED. REFER TO MANUFACTURER.
2. DO NOT INSTALL SUPPORTS OVER BATTEN STRIPS, FASTENER HEADS, METAL PLATES OR FIELD SEAMS.

PIPE SUPPORT DETAIL
NTS

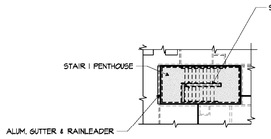

2 STAIR 1 PENTHOUSE ROOF
3/32" = 1'-0"

GENERAL NOTES

1. ALL EPDM DETAILS ARE BASED ON FIRESTONE RUBBERGUARD EPDM (FULLY ADHERED) MEMBRANE SYSTEMS.
2. REFER TO MANUFACTURER FOR MOST CURRENT INFORMATON AND INSTALLATION GUIDELINES.
3. INSTALL METAL WORK, INCLUDING FLASHING, TO SMACNA RECOMMENDATIONS. SHOP FABRICATED METAL SHALL MEET ANSI/ SPRI ES-1 OR FM STANDARD.
4. WOOD NAILER(S) SHALL BE INSTALLED TO MEET APPLICABLE BUILDING CODES OR 200 LBS. PER LINEAR FOOT MIN. IN ANY DIRECTION.
5. REFER TO MEP DRAWINGS FOR MORE DETAILED INFORMATION ON SYSTEMS AT ROOF INCLUDING DRAINS AND EQUIPMENT.
6. ALL GRID LINE DESIGNATIONS ARE TO OUTSIDE FACE OF STUD (F.O.S.) EXCEPT WHERE NOTED OTHERWISE.
7. ℄ DENOTES CENTERLINE OF DEMISING WALL
8. ALL ROOF PITCHES ARE TO HAVE A MINIMUM SLOPE OF 1/4" PER FOOT EXCEPT WHERE NOTED OTHERWISE.

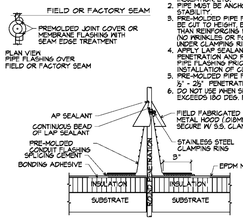

CONDUIT PENETRATION NOTES:
1. REMOVE ALL EXISTING FLASHINGS, LEADS, ETC. PIPE SURFACE MUST BE FREE OF ALL RUST, GREASE, INSULATION, ETC.
2. PIPE MUST BE ANCHORED TO ENSURE STABILITY.
3. PRE-MOLDED PIPE FLASHINGS MAY BE CUT TO HEIGHT BUT NO LOWER THAN THE CLAMPING RING. NO MODIFICATIONS OR FOLDS UNDER CLAMPING RING.
4. APPLY LAP SEALANT BETWEEN PENETRATION AND PRE-MOLDED PIPE FLASHING PRIOR TO INSTALLATION OF CLAMPING RING.
5. PRE-MOLDED PIPE FLASHING FITS ½" - 25" PENETRATION SIZES.
6. DO NOT USE WHEN SERVICE LINE TEMP. EXCEEDS 180 DEG. F.

CONDUIT PENETRATION
NTS

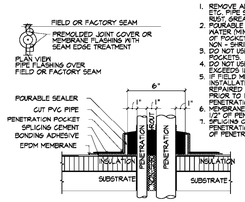

PITCH POCKET NOTES:
1. REMOVE ALL EXISTING FLASHINGS, LEADS, ETC. PIPE SURFACE MUST BE FREE OF ALL RUST, GREASE, INSULATION, ETC.
2. POURABLE SEALER MOUNDED TO SHED WATER (MINIMUM DEPTH OF 2", REMAINDER OF POCKET MAY BE FILLED WITH A NON - SHRINKING GROUT.
3. DO NOT USE FOR EXISTING PENETRATION POCKETS.
4. DO NOT USE WHEN SERVICE LINE TEMP. EXCEEDS 180 DEG. F.
5. IF FIELD MEMBRANE IS CUT FOR INSTALLATION, THE MEMBRANE MUST BE REPAIRED WITH EPDM MEMBRANE PRIOR TO INSTALLATION OF THE PENETRATION POCKET.
6. MEMBRANE MUST BE INSTALLED WITHIN 1/2" OF PENETRATION.
7. SPLICING CEMENT REQUIRED ON PENETRATIONS AND MEMBRANE INSIDE OF PENETRATION POCKET.

PITCH POCKET DETAIL
NTS

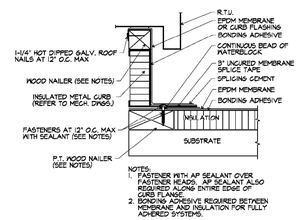

NOTES:
1. FASTENER WITH AP SEALANT OVER FASTENER HEADS. AP SEALANT ALSO REQUIRED ALONG ENTIRE EDGE OF CURB FLANGE.
2. BONDING ADHESIVE REQUIRED BETWEEN MEMBRANE AND INSULATION FOR FULLY ADHERED SYSTEMS.

EQUIPMENT CURB
NTS

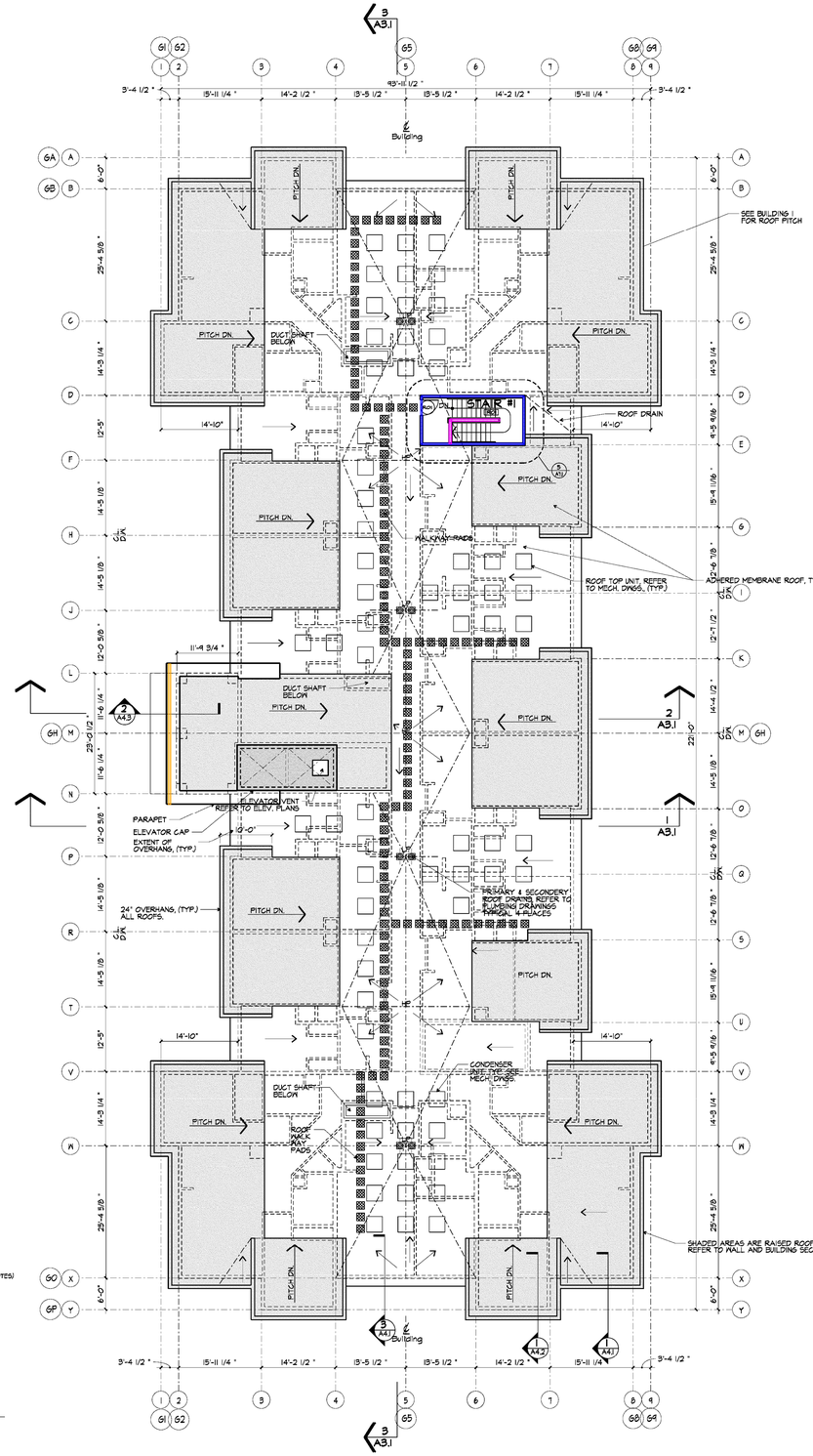

1 ROOF PLAN
3/32" = 1'-0"

ALL ROOF PITCHES ARE TO SLOPE 1/4" PER FOOT, MINIMUM, TYPICAL.

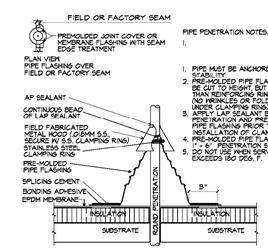

PIPE PENETRATION NOTES:
1.
1. PIPE MUST BE ANCHORED TO ENSURE STABILITY.
2. PRE-MOLDED PIPE FLASHING MAY BE CUT TO HEIGHT BUT NO LOWER THAN THE CLAMPING RING. NO MODIFICATIONS OR FOLDS UNDER CLAMPING RING.
3. APPLY LAP SEALANT BETWEEN PENETRATION AND PRE-MOLDED PIPE FLASHING PRIOR TO INSTALLATION OF CLAMPING RING.
4. PRE-MOLDED PIPE FLASHING FITS ½" - 6" PENETRATION SIZES.
5. DO NOT USE WHEN SERVICE LINE TEMP. EXCEEDS 180 DEG. F.

PIPE PENETRATION DETAIL
NTS

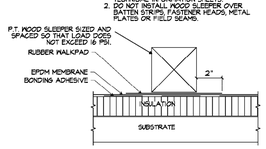

SLEEPER NOTES:
1. PIPE AND EQUIPMENT SUPPORTS ARE RECOMMENDED IN PLACE OF WOOD SLEEPERS. REFER TO MANUF'S TECHNICAL INFORMATION SHEETS.
2. DO NOT INSTALL WOOD SLEEPER OVER BATTEN STRIPS, FASTENER HEADS, METAL PLATES OR FIELD SEAMS.

PT SLEEPER DETAIL
NTS

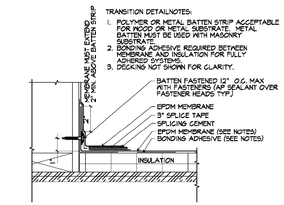

TRANSITION DETAIL
NTS

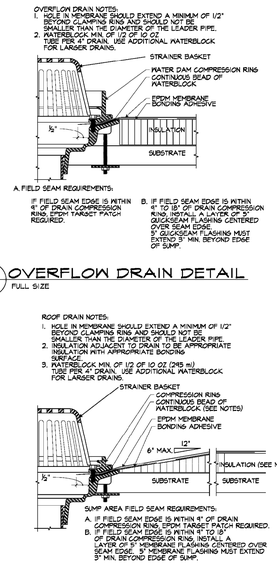

OVERFLOW DRAIN DETAIL
FULL SIZE

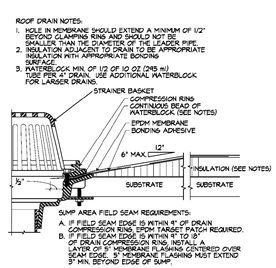

ROOF DRAIN DETAIL
NTS

600R CROWN COLONY
AN APARTMENT COMMUNITY

Quincy
Massachusetts

sheskeyARCHITECTS

14 Franklin Street Quincy, MA 02169
sheskeyarchitects.com | 617-770-2010

Site Engineers
H. W. MOORE ASSOCIATES
112 Shawmut Avenue
Boston, MA 02118

Landscape Architect
BLAIR HINES DESIGN ASSOCIATES
319 Harvard Street, Suite 25
Brookline, MA 02446

Structural Engineers
VEITAS & VEITAS ENGINEERS
639 Granite Street
Braintree, MA 02184

Mechanical Engineers
SOUTH SHORE CONSTRUCTION CONSULTANTS
34 Quincy avenue
Braintree, MA 02184

Electrical Engineers
VINCENT A. DiIORIO, INC.
89 Access Road, Suite 18
Norwood, MA 02062

PERMIT SET
FEB 29 2016

NOT FOR CONSTRUCTION

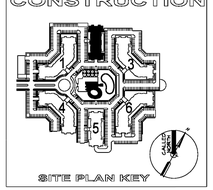

SITE PLAN KEY

date:	revision:

project no: 32129.00 | scale:

BUILDING 2

ROOF PLAN

REGISTERED ARCHITECT GARRY W. GARDNER No. 6024 COMMONWEALTH OF MASSACHUSETTS

A1.3